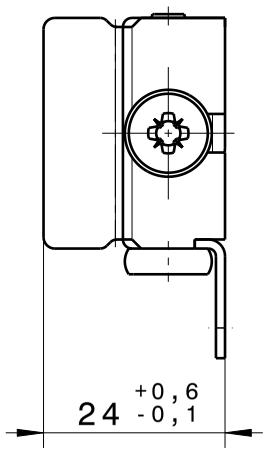

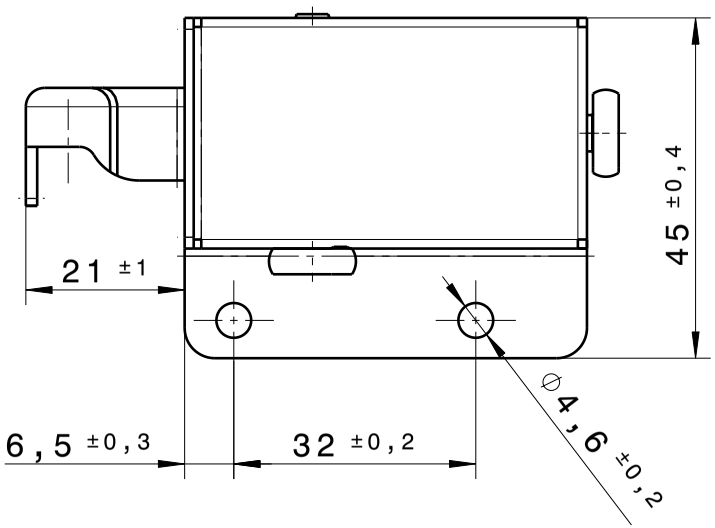

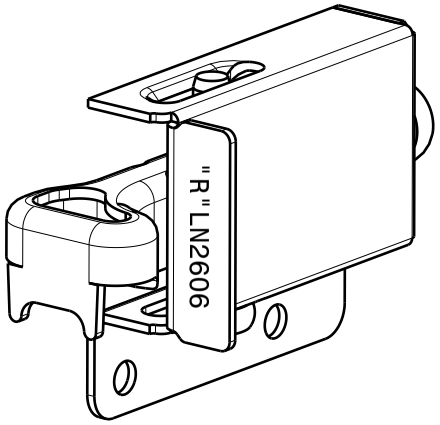

1:1

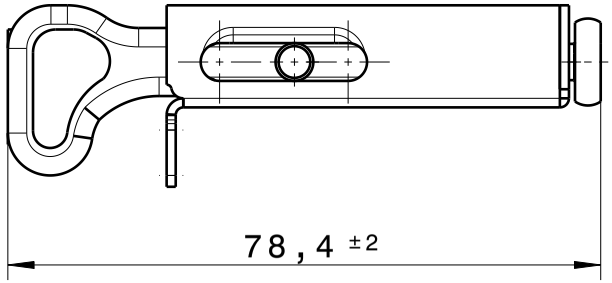

Diese Zeichnung unterliegt nicht dem Änderungsdienst
This drawing is not subject to change service

The reproduction, distribution and utilization of this drawing as well as the communication of its contents to others without explicit authorization is prohibited. Offenders will be held liable for the payment of damages. All rights reserved in the event of the grant of a patent, utility model or design.

Mass:	g	measures to be checked and control numbers according to HS 5000	Date	Name	Ind.	VS	Revision
Volume:	cm³		21.08.17	Lappe	1	0	Aktualisierung
Surface:	cm²	ISO 16016	08.10.10	Lappe	0	0	

Hettich

Spec. applicable	DIN A4	Date	Name	requirements for the corrosion resistance according to HS 150
Maturity Level: S	Detailer	08.10.10	Lappe	Level:
General tolerance according to DIN ISO 2768-mK	Approv.	29.08.17	Reinert	Description
In case of change check	Scale	Proj.	State	ZSB SAH 116.1 S rechts Assembly SAH116.1 S right
	1:1		RELEASED	

Type		Drawing group	Drawing No.	Item No.	Index	Vers.	Sheet
Cust 0	from	LA	05133	0000	01	00	1 of 1
	to	LA	05133	0005	01	00	

Hettich Heinze GmbH & Co. KG

Replacement for: LA 05133 0000

Develop.-No.: X 000964 1028 00 00