DW#	B1-TF04	PH1 - FLH - TFC5	Revision Record

Part No.	Size	S		L	
		Inch	mm	Inch	mm
	#4x1/2"	Full	Full	0.46"~0.50"	11.7~12.7
	#4x5/8"	Full	Full	0.58"~0.63"	14.8~15.8

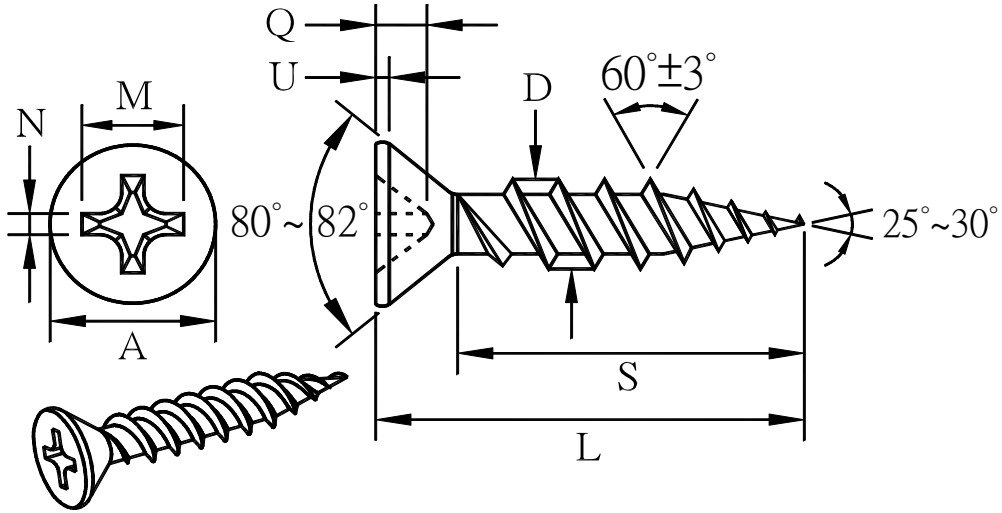

Revision Record			
Date	Dim./ Spec.	Old	New

Unit	Size /Thrds	A	U	Phillips M	Phillips N	Gauge Phillips 針	Gauge Phillips Q	D	Wire	Torque
Inch	#4-22	0.225" 0.195"	0.012" 0.003"	Min. 0.115"	Min. 0.018"	#1	0.082" 0.066"	0.115" 0.104"	0.086"	13 lbf.in
mm		5.71 4.96	0.30 0.10	Min. 2.93	Min. 0.46		2.08 1.68	2.90 2.65	2.18	15 kgf.cm

Specifications

Material	SAE C1018/C1022
Recess	#1Phillips
Head	Flat head
Thread	60°TF-Fine Thread(Coarser)
Heat Treatment	Surface Hardness:HV 450~800 ; Core Hardness: HV 320~450 ;
	Bending Angle: ＞15°Breaking
Surface:	☐Zinc
	☐Bright Brass
Attention	

Customer approve: w/date	
Approved by : w/date	
CAD by : w/date	Yu Chen Lin 2017.3.24
Issued date :	2017.3.24 year-month-day