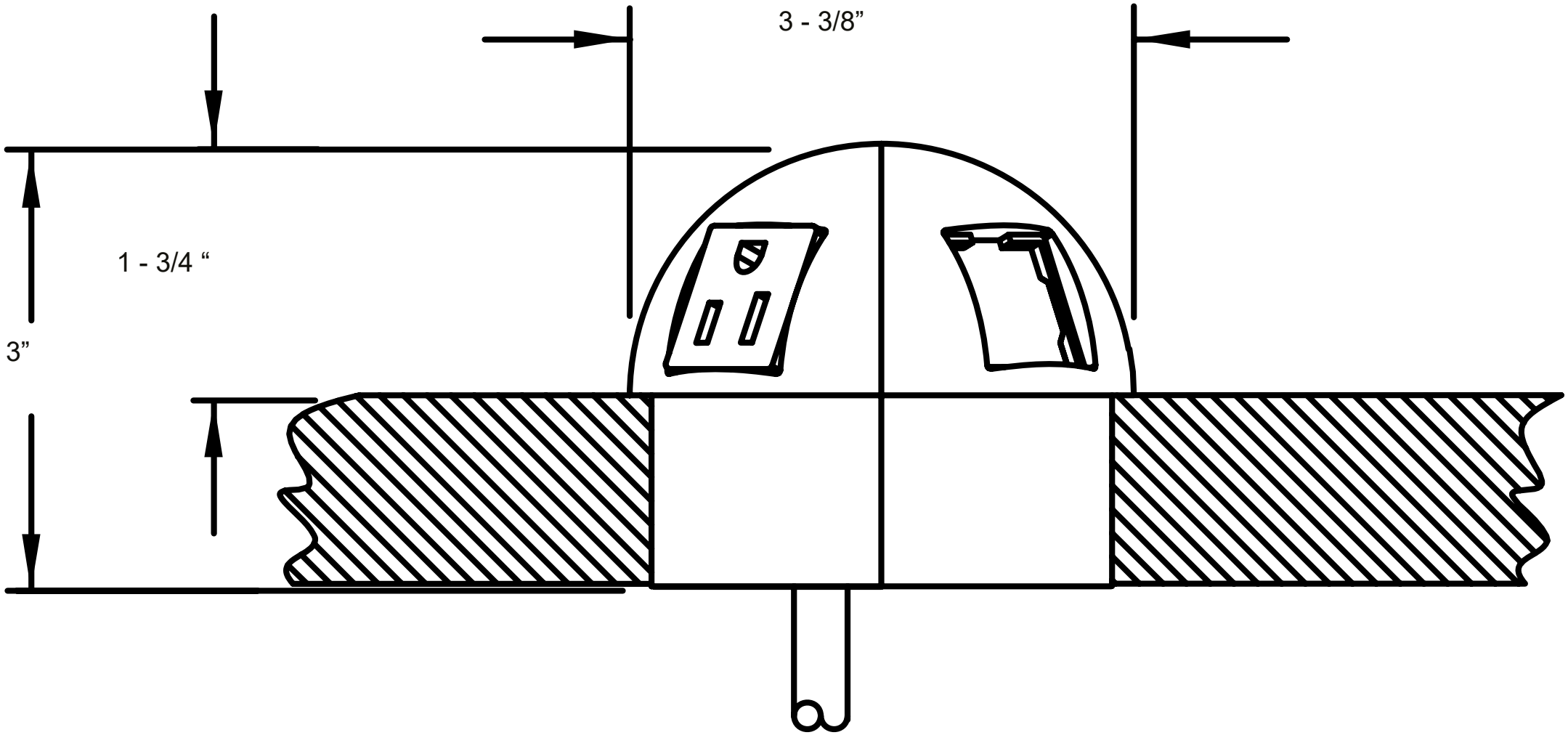
3 - 3/8”
1 - 3/4 “
3”